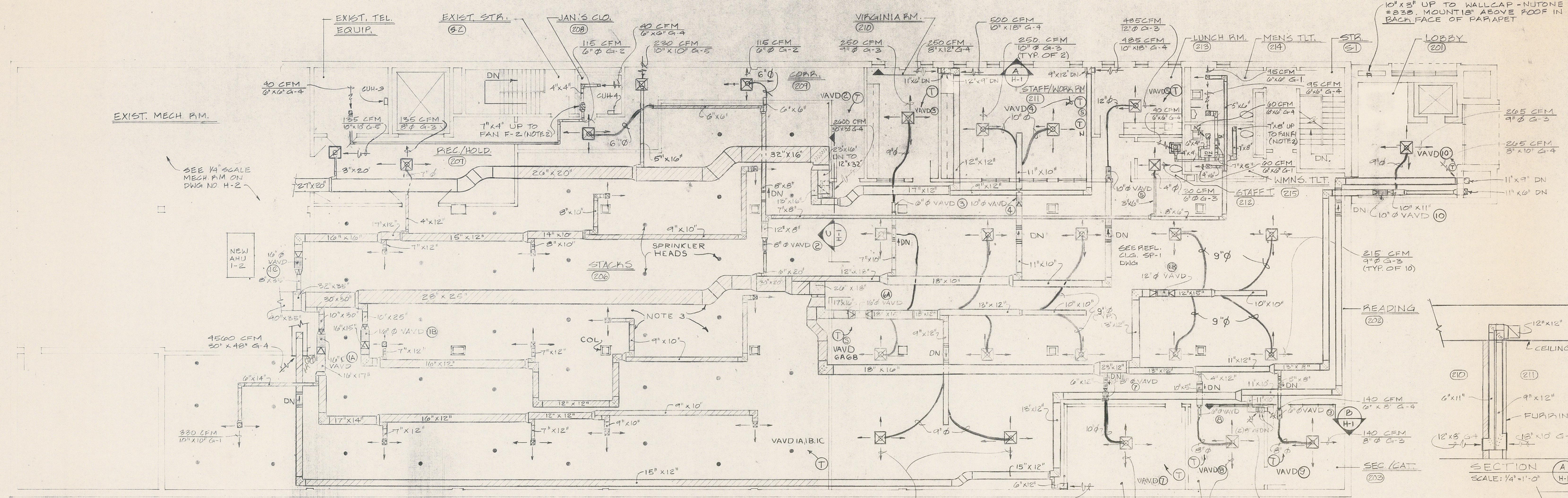

SECOND FLOOR PLAN

SCALE: 1/8" = 1'-0"

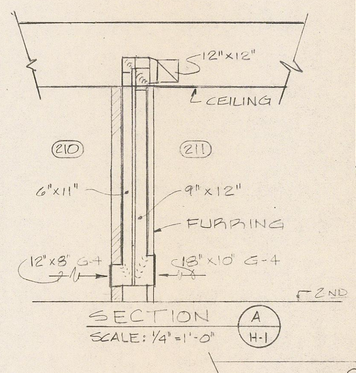

SECTION (A / H-1)
SCALE: 1/4" = 1'-0"

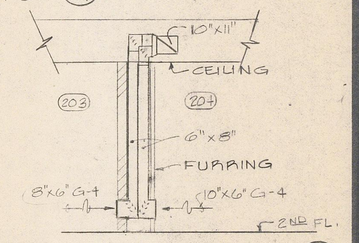

SECTION (B / H-1)
SCALE: 1/4" = 1'-0"

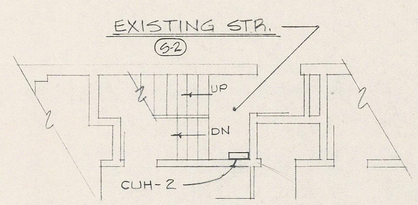

PART FIRST FLOOR PLAN

SCALE: 1/8" = 1'-0"

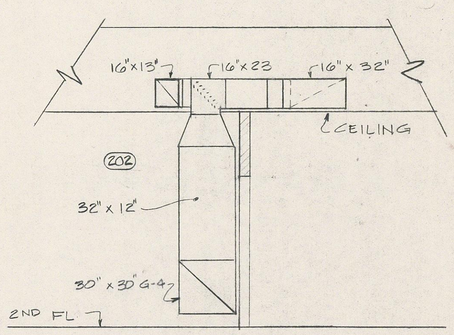

SECTION (C / H-1)
SCALE: 1/4" = 1'-0"

MECHANICAL LEGEND

SYMBOL	DESCRIPTION	SYMBOL	DESCRIPTION
	SUPPLY DUCT		STRAINER
	RETURN DUCT		STRAINER WITH HOSE BIBB
	FRESH AIR DUCT		STEAM TRAP
	EXHAUST DUCT		FLOW CONTROL VALVE
	INCLINED DROP IN DUCT (WITH RESPECT TO AIR FLOW)		CHECK VALVE
	INCLINED RISE IN DUCT (WITH RESPECT TO AIR FLOW)		MOTORIZED VALVE
	ACOUSTICALLY LINED DUCT		DRAIN VALVE
	FLEXIBLE CONNECTION IN DUCT		PRESSURE GAUGE
	SIDEWALL DIFFUSER		PRESSURE REDUCING VALVE
	RETURN GRILLE		RELIEF VALVE
	DOOR LOUVER		CONSTANT FLOW CONTROL VALVE-C.F.C.F.
G-1,2,...	GRILLE TYPE		GLOBE VALVE
	MOTORIZED DAMPER		AUTOMATIC VALVE-2-WAY
MAD	MANUAL DAMPER		AUTOMATIC VALVE-3-WAY
	FLEXIBLE DUCT		PIPE ANCHOR
MAV	MANUAL AIR VENT		FLOW INDICATOR
T	THERMOSTAT		THERMOMETER
T N	NIGHT SETBACK THERMOSTAT	EB	ELECTRICAL BASEBOARD RADIATION
T D	DESCRIMINATOR THERMOSTAT	HWS	HOT WATER SUPPLY
T W	WARM-UP THERMOSTAT	HWR	HOT WATER RETURN
D	EXHAUST FAN SPEED CONTROL	CWR	CHILLED WATER RETURN
T H	THERMOSTAT/HUMIDISTAT COMBINATION	CWS	CHILLED WATER SUPPLY
H	HUMIDISTAT	OS	OIL SUPPLY
—/—/—	STEAM	OR	OIL RETURN
--/--/-	STEAM CONDENSATE	FOS	FUEL OIL SUPPLY
—D—	CONDENSATE DRAIN	FOR	FUEL OIL RETURN
—O—	PIPE UP	RV	REFRIGERANT VAPOR
—O—	PIPE DOWN	RL	REFRIGERANT LIQUID
	GATE VALVE	RD	REFRIGERANT DISCHARGE
	FLEXIBLE PIPE	G	GAS
	UNION	T/O	OMNIZONE THER. W/DEC SENSOR
	CAPPED PIPE	VAVD	VARIABLE AIR VOLUME DAMPER
	CONNECT TO EXISTING		

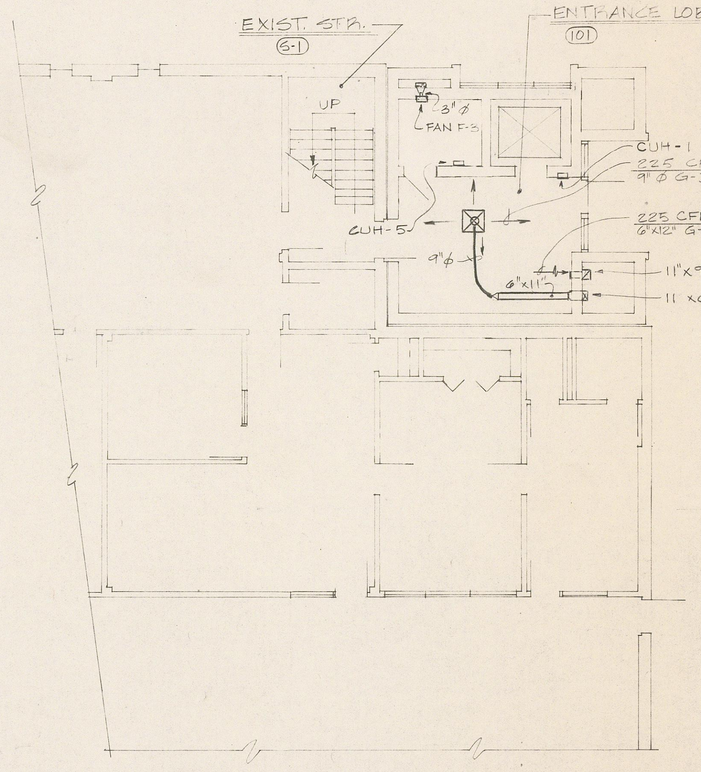

PARTIAL FIRST FLOOR PLAN

SCALE: 1/8" = 1'-0"

NOTES:

1. ALL SIDEWALL RETURN GRILLES (G-4) SHALL BE INSTALLED SO THAT BOTTOM IS 8" AFF.
2. MODIFY EXIST. FAN CURBS ON ROOF TO RECEIVE NEW FANS F1, F2.
3. ROUTE DUCT THRU STACK AREA BETWEEN SPRINKLER HEADS; MAINTAIN A MIN OF 36" BETWEEN HEADS AND DUCT UNLESS OTHERWISE APPROVED BY ENGR (LOCATION OF SPRINKLER HEADS SHOWN ARE APPROXIMATE)

These construction documents are for use in connection with this project only and are not intended or represented to be suitable for reuse on additions to this project, or on any other project. They may be used only subject to terms in writing of, and appropriate compensation to the Architect/Engineer. Any reuse without written agreement will be at the user's sole risk and without liability or legal exposure to the Architect/Engineer; the user shall indemnify and hold harmless the Architect/Engineer from all claims, damages, losses and expenses arising out of or resulting therefrom.

COMMONWEALTH OF VIRGINIA
PAUL M. LYMAN JOHNSON
CERTIFICATE NO. 96
REGISTERED PROFESSIONAL ENGINEER

SIMPSON • JOHNSON, INC.
CONSULTING ENGINEERS
701 CLAY STREET / LYNCHBURG, VIRGINIA 24504

COMMONWEALTH OF VIRGINIA
PAUL M. SIMPSON, JR.
CERTIFICATE No. 23178
REGISTERED PROFESSIONAL ENGINEER

CLARK • NEXSEN • OWEN • BARBIERI • GIBSON
Architects • Engineers
A PROFESSIONAL CORPORATION
ALLIED ARTS BLDG. BOX 1156 • LYNCHBURG, VA 24505 • 804/847-9081
740 DUKE STREET / SUITE 200 • NORFOLK, VA 23510 • 804/622-2800

RELOCATION OF THE
JONES MEMORIAL LIBRARY
MEMORIAL AVE. & LAKESIDE DR.
LYNCHBURG, VIRGINIA

HEATING & AIR CONDITIONING
FLOOR PLANS

revision	

design by	PTB
drawn by	TCD, PTB
checked	EAS
date	9/86
comm	2671.1
scale	NOTED
drawing	H-1