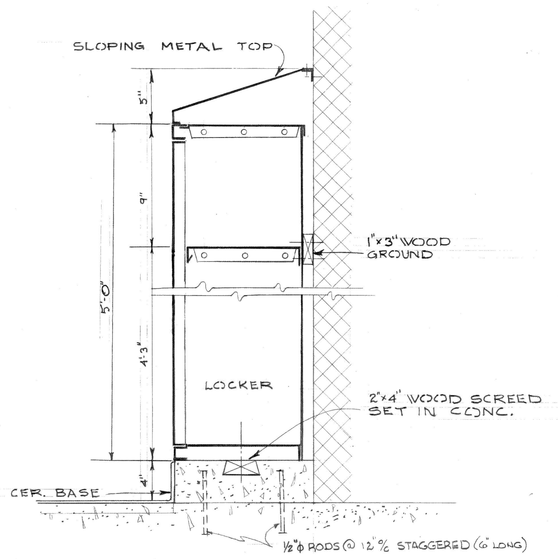

LOCKER DETAIL (A-3/4)

1 1/2" = 1'-0"

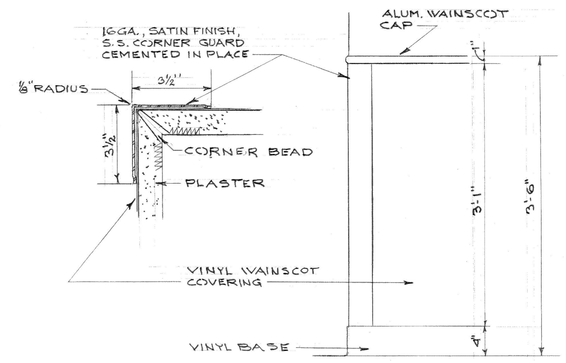

SECTION

3" = 1'-0"

ELEVATION

1" = 1'-0"

STAINLESS STEEL CORNER GUARD (A-3/5)

FINISH SCHEDULE

SPACE NO.	SPACE NAME	FLOOR	BASE	WALLS	W'COT	CEILING	CEILING HEIGHT	DETAILS & REMARKS
200 THRU 203	CORRIDOR	V.A.T.	VINYL	H.W.P.	3'-6" VINYL FABRIC	AC.T.	8'-6"	(A2/6) FOR WALL RAIL SEE SPEC'S
204	NURSES STATION	V.A.T.	VINYL	H.W.P.		AC.T.	8'-6"	(A3/1) (A3/3)
205	HALL	V.A.T.	VINYL	H.W.P.	3'-6" VINYL FABRIC	AC.T.	8'-6"	(A2/6) FOR WALL RAIL SEE SPEC'S
206 THRU 218 & 225 THRU 228	BED ROOMS	V.A.T.	VINYL	H.W.P.		H.W.P.	8'-6"	(A3/2) (A4/5) (A3/6)
219 THRU 224	TOILET	C.T.	C.T.	H.W.P.	C.T. 4'-6"	H.W.P.	8'-0"	(A3/2) (A4/5) (A3/6)
235 & 230	TOILET	C.T.	C.T.	H.W.P.	C.T. 4'-6"	H.W.P.	8'-0"	(A3/2) (A4/5) C.T. FULL HEIGHT @ TUBS
237 THRU 239	LINEN CLOSET	V.A.T	VINYL	H.W.P.		H.W.P.	8'-6"	(A1/1)
240	BATH	C.T.	C.T.	H.W.P.	C.T. 4'-6"	H.W.P.	8'-6"	(A3/4) (A3/2) (A4/11) C.T. FULL HEIGHT AT SHOWER
241	EMER. BATH	C.T.	C.T.	C.T.		H.W.P.	8'-6"	(A3/2)
242	JANITOR	C.T.	C.T.	H.W.P.	EPOXY PAINT 4'-6"	H.W.P.	8'-6"	(A3/2) (A3/2)
243	LAUNDRY CLOSET	C.T.	C.T.	H.W.P.	EPOXY PAINT 4'-6"	H.W.P.	8'-6"	(A3/2) (A4/1)
244	LAUNDRY CHUTE	CONC.		EXPOSED		EXPOSED		
245	DENTAL ROOM	V.A.T.	VINYL	H.W.P.		A.C. T.	8'-6"	(A2/3)
246	MEDICINE RM	V.A.T.	VINYL	H.W.P.		H.W.P.	8'-6"	SEE SHEET A-10
247	NURSES TOILET	C.T.	C.T.	H.W.P.	C.T. 4'-6"	H.W.P.	8'-0"	(A3/2)
248	PANTRY	V.A.T.	VINYL	H.W.P.		AC. T	8'-6"	SEE SHEET A-10
249	STORAGE	CONC.		H.W.P.		H.W.P.	8'-0"	
250	SOILED UTILITY	C.T.	C.T.	H.W.P.		H.W.P.	8'-6"	(A2/3) SEE SHEET A-10
251	CLEAN UTILITY	C.T.	C.T.	H.W.P.		H.W.P.	8'-6"	(A2/3) SEE SHEET A-10
252	SCRUB-UP	C.T.	C.T.	H.W.P.	C.T. 4'-6"	H.W.P.	8'-6"	(A3/2) SEE SHEET A-10
253	INTENSIVE CARE	V.A.T.	VINYL	H.W.P.		H.W.P.	8'-6"	
254	TOILET	C.T.	C.T.	H.W.P.	C.T. 4'-6"	H.W.P.	8'-0"	(A3/2) (A4/9)
255	DAY ROOM	V.A.T.	VINYL	H.W.P.		AC. T.	8'-6"	(A11/14)
256	JANITOR	C.T.	C.T.	H.W.P.	EPOXY PAINT 4'-6"	H.W.P.	8'-6"	(A4/1) (A3/2)
257	STORAGE	CONC.		H.W.P.		H.W.P.	8'-6"	
E-1	ELEVATOR			EXPOSED				
S-1	STAIR	V.A.T.	METAL	PAINTED C.M.U.	3'-6" EPOXY PTD	AC.T. SOFFITS	VARIES	(A11/4)
S2, S3 & S4	STAIR	V.A.T.	METAL	PAINTED C.M.U.	3'-6" EPOXY PTD	AC.T. SOFFITS	VARIES	(A11/1) (A11/2)

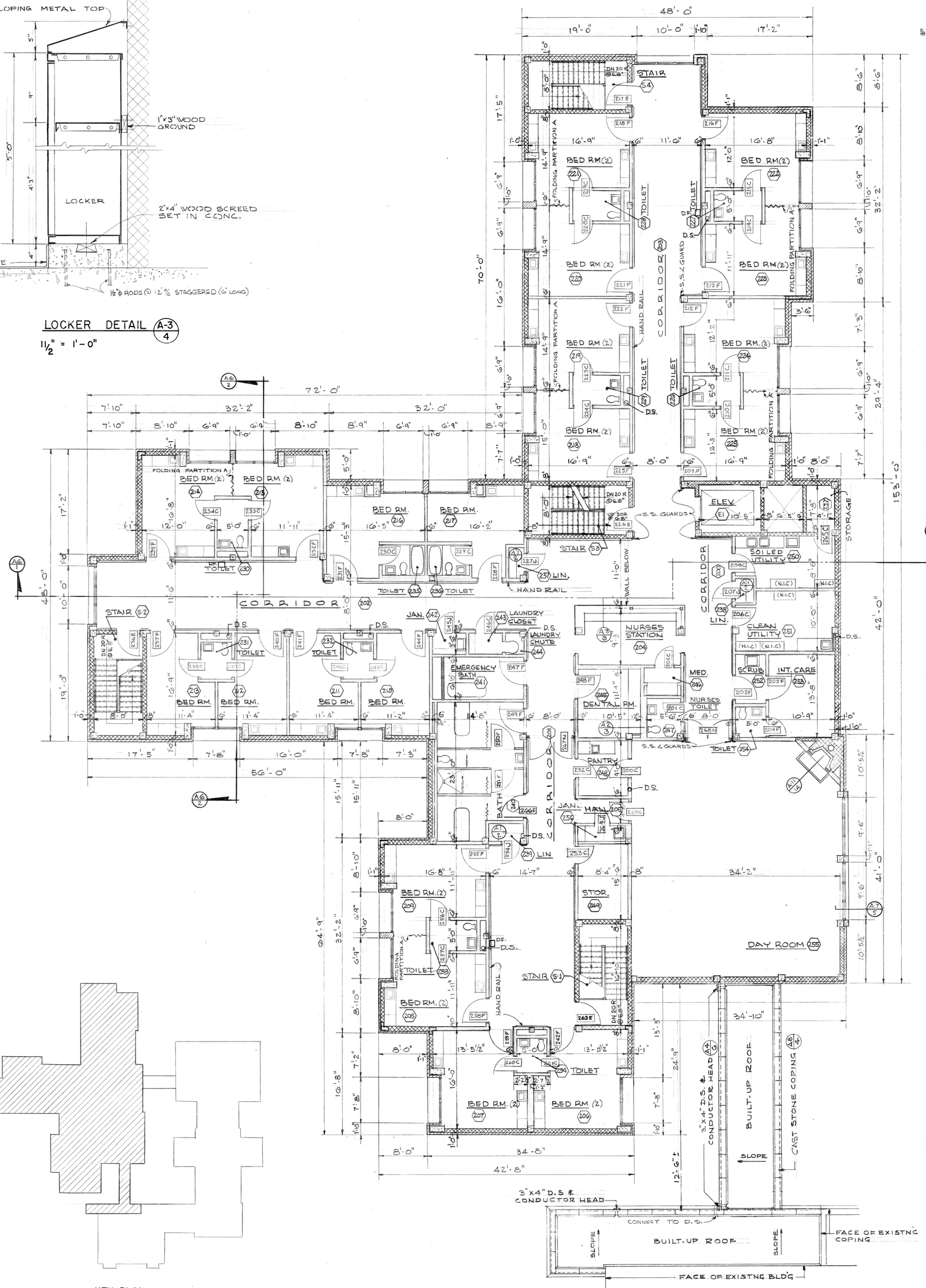

SECOND FLOOR PLAN

1/8" = 1'-0"

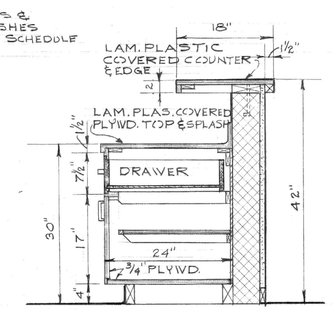

SECTION THRU COUNTER (A-3/3)

3/4" = 1'-0"

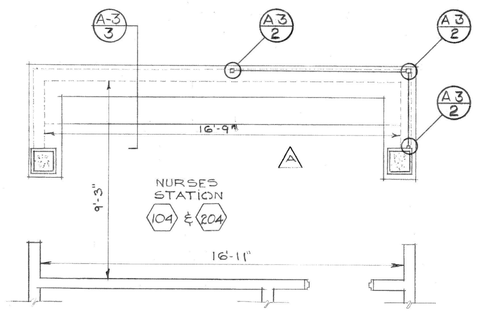

TYP. PLAN

1/4" = 1'-0"

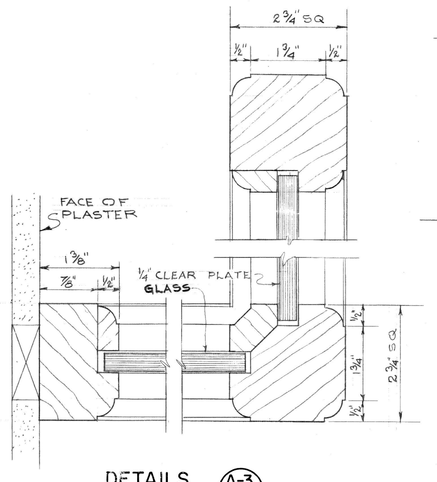

DETAILS (A-3/2)

HALF SIZE

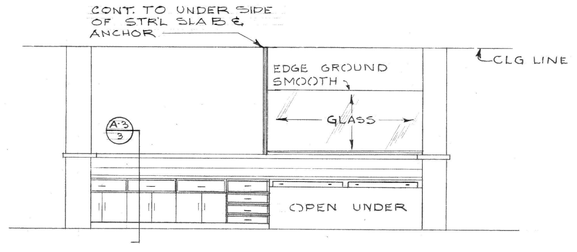

ELEVATION "A"

1/4" = 1'-0"

NURSES STATION 104 & 204 DETAILS (A-3/1)

KEY PLAN

COMMONWEALTH OF VIRGINIA — PENDLETON S. CLARK — CERTIFICATE No. 60 — CERTIFIED ARCHITECT

PROJECT NO. VA.-208

ALTERATIONS & ADDITIONS TO GUGGENHEIMER MEMORIAL HOSPITAL
LYNCHBURG, VIRGINIA

CLARK, NEXSEN & OWEN—ARCHITECTS
LYNCHBURG, VIRGINIA — NORFOLK, VIRGINIA

REVISED	SECOND FLOOR PLAN				DWG. NO.
	DATE	SCALE	DRAWN BY	CHECKED	
	JAN. 1968	AS NOTED	MMS-SWD	CLB	A-3